REVISIONS			
ZONE	REV	DESCRIPTION	DATE
	B	REDUCED COILS FROM 13 TO 10	12/5/2003
	C	ADDED VENT HOLES	3/15/2004

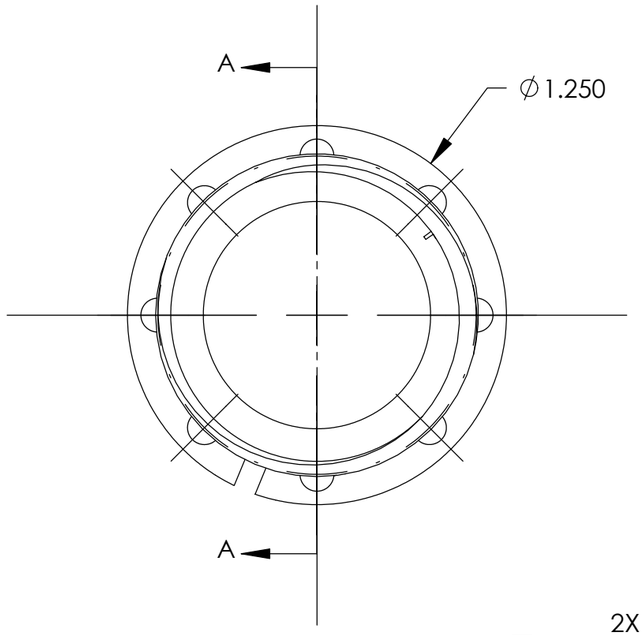

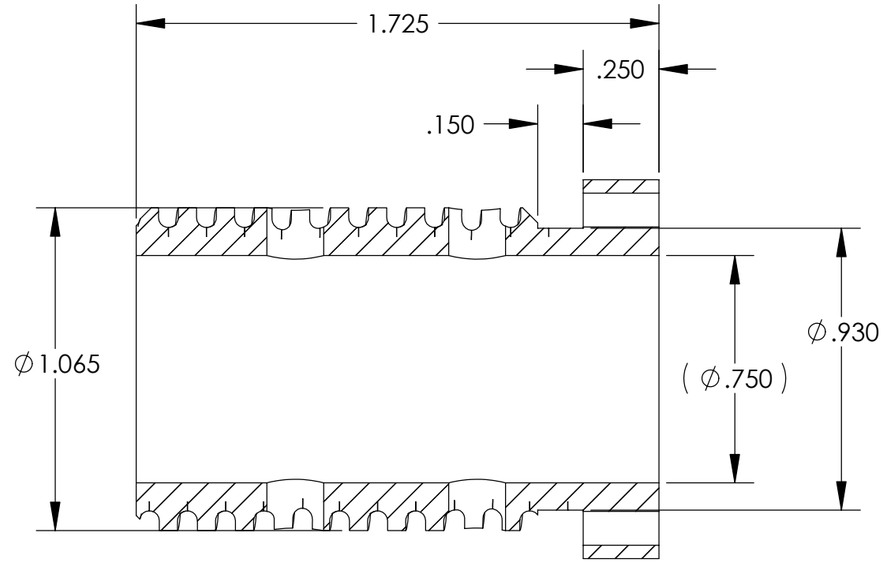

SECTION A-A

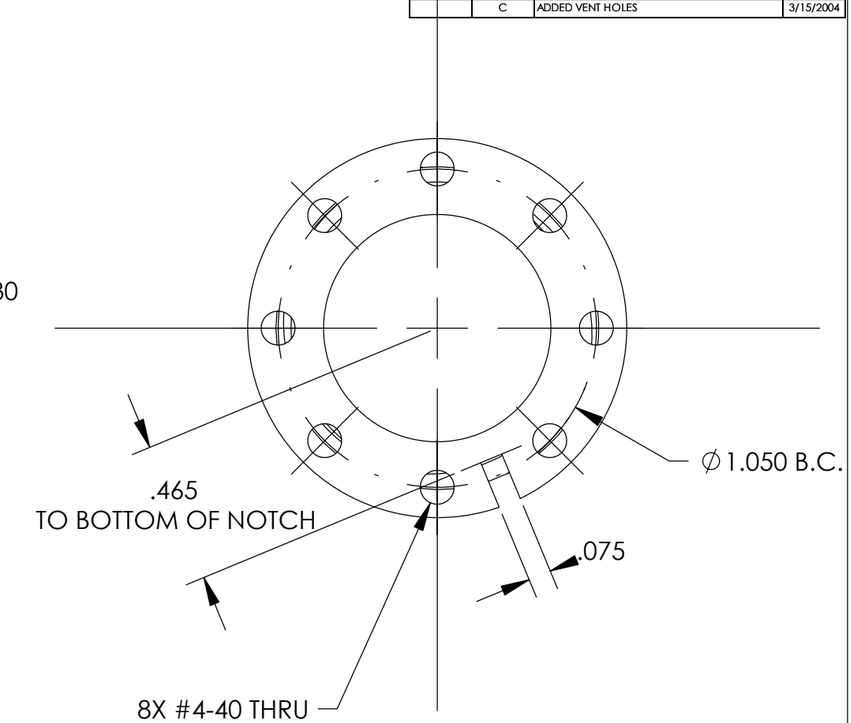

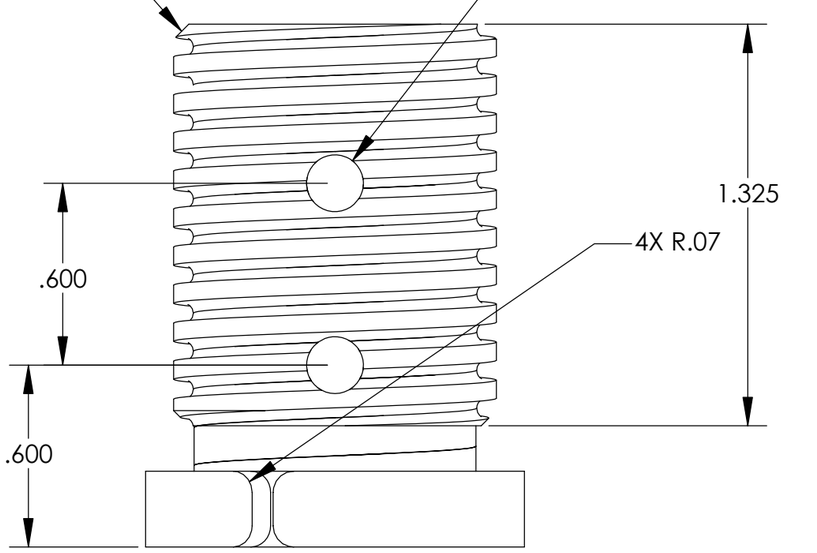

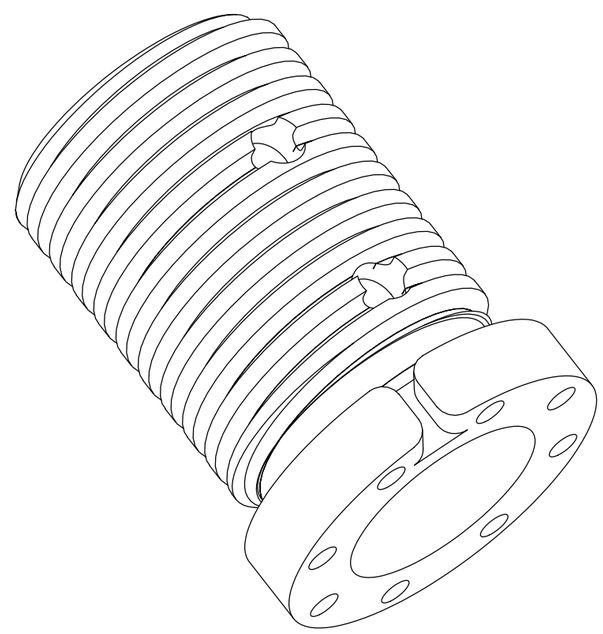

NOTES:
1. .750 DIA TO FIT P/N -155.
2. HELIX TO BE .065 DIA X 1.00 DIA CENTER-TO-CENTER SPIRAL WITH .125 PITCH, SINGLE START.
3. .075 WIDE GROOVE IS FOR CLEARANCE.
4. CLOCKING OF SPIRAL TO CLEARANCE SLOT IS NOT CRITICAL.
5. BURRS FROM VENT HOLES MUST NOT OBSTRUCT BORES.
6. CLOCKING OF VENT HOLES IS NOT CRITICAL.

UNLESS OTHERWISE SPECIFIED:

DIMENSIONS ARE IN INCHES
DECIMAL TOLERANCES:
.X ±.030 .XX ±.015 .XXX ±.005

ANGULAR TOL: ± 1° SURFACE ROUGHNESS 63

INTERNAL AND EXTERNAL SURFACE INTERSECTIONS SHALL BE UNIFORMLY FINISHED WITH CHAMFER .005/.010 X 45° OR RADIUS .005/.010.
CHAMFER ALL THREADED HOLES 110% OF MAJOR DIAMETER X 45°

MATERIAL: **OF Copper**

FINISH: **NONE**

High Precision Devices

1668 Valtec Lane, Suite C, Boulder, Colorado 80301
Phone: (303) 447-2558 Fax: (303) 447-2548 Web Site: www.hpd-online.com

TITLE: **p02101-188 heat station, pot**

CONFIGURATION: **00-Default**

SIZE	QTY PER ASSM:	SCALE:	SHEET	REV
B	1	2:1	1 OF 1	C
	DATE: 5/26/2004	DRAWN BY: C. Danaher		